SINGLE STAGE & TWO-STAGE GAS FURNACES

USER'S MANUAL

NON-CONDENSING GAS FURNACES

80+ AFUE
(United States Only)

J801X*U Upflow / Horizontal Furnace

J801X*D Downflow Furnace

CONDENSING GAS FURNACES

95% & Up to 96% AFUE

J951X*U & J952V*U Upflow / Horizontal Furnace

J951X*D & J962V*D Downflow Furnace

⚠ WARNING

FIRE OR EXPLOSION HAZARD

- **Failure to follow safety warnings exactly could result in serious injury, death or property damage.**
- **Installation and service must be performed by a qualified installer, service agency or the gas supplier.**
- **Do not store or use gasoline or other flammable vapors and liquids in the vicinity of this or any other appliance.**

WHAT TO DO IF YOU SMELL GAS

- **Do not try to light any appliance.**
- **Do not touch any electrical switch; do not use any phone in your building.**
- **Leave the building immediately.**
- **Immediately call your gas supplier from a neighbors phone. Follow the gas suppliers instructions.**
- **If you cannot reach your gas supplier, call the fire department.**

DO NOT DESTROY. PLEASE READ CAREFULLY & KEEP IN A SAFE PLACE FOR FUTURE REFERENCE.

TABLE OF CONTENTS

IMPORTANT SAFETY INFORMATION **3**
GAS SUPPLY & PIPING 3
FILTER 3
FLOOD DAMAGE 3
IMPORTANT SAFETY INFORMATION **4**
VENTING SYSTEM 4
SOURCES OF CORROSION 4
CLEARANCES TO COMBUSTIBLES 4
ABOUT THE FURNACE **5**
INTRODUCTION 5
CATEGORY I (NON-CONDENSING) FURNACES 5
CATEGORY IV (CONDENSING) FURNACES 5
FILTER 5
THERMOSTAT 5
FURNACE LOCATION 5
COMPONENT LOCATIONS FOR SINGLE STAGE FURNACES 6
COMPONENT LOCATIONS FOR TWO-STAGE FURNACES 7
STARTUP & SHUTDOWN **7**
STARTING THE FURNACE 7
SHUTTING DOWN THE FURNACE 7
MAINTENANCE & INSPECTION **8**
FURNACE & AIR DUCTS 8
VENTING SYSTEM 8
BLOWER & FILTER 8
BURNER OPERATION 8
NEW CONSTRUCTION 8
TROUBLESHOOTING **8**

IMPORTANT SAFETY INFORMATION

Safety markings are used frequently throughout this manual to designate a degree or level of seriousness and should not be ignored. **WARNING** indicates a potentially hazardous situation that if not avoided, could result in personal injury or death. **CAUTION** indicates a potentially hazardous situation that if not avoided, may result in minor or moderate injury or property damage.

⚠ WARNING:

The safety information listed below must be followed during the installation, service, and operation of this furnace. Failure to follow safety recommendations could result in possible damage to the equipment, serious personal injury, or death.

⚠ WARNING:

This furnace is not approved for installation in mobile homes. Installing this furnace in a mobile home could cause fire, property damage, and/or personal injury.

GAS SUPPLY & PIPING

WHAT TO DO IF YOU SMELL GAS

- **Do not try to light any appliance.**
- **Do not touch any electrical switch; do not use any phone in your building.**
- **Leave the building immediately.**
- **Immediately call your gas supplier from a neighbors phone. Follow the gas suppliers instructions.**
- **If you cannot reach your gas supplier, call the fire department.**

INSTALLATION AND SERVICE MUST BE PERFORMED BY A QUALIFIED INSTALLER, SERVICE AGENCY OR THE GAS SUPPLIER.

This furnace does not have a pilot. It is equipped with an ignition device which automatically lights the burner. **DO NOT** light the burner by hand.

IMPORTANT NOTE

IF THE GAS SUPPLY FAILS TO SHUT OFF OR IF OVERHEATING OCCURS, SHUT OFF THE GAS VALVE TO THE FURNACE BEFORE SHUTTING OFF THE ELECTRICAL SUPPLY!

⚠ WARNING:

The furnace was shipped from the factory equipped to operate on natural gas. Conversion to LP/propane gas must be performed by a licensed HVAC technician using a factory supplied conversion kit. Failure to use the proper conversion kit can cause fire, explosion, property damage, carbon monoxide poisoning, personal injury, or death.

⚠ WARNING:

All gas piping and shutoff valves must be installed in compliance with local codes and utility regulations by licensed installers. DO NOT attempt to modify, or tap into existing gas lines yourself. Fire or explosion may result causing property damage, personal injury or loss of life. Failure to follow the safety warnings exactly could result in serious injury, death or property damage.

FILTER

⚠ WARNING:

Never operate the furnace without a filter in place. Accumulating dust in the return air can build up on internal components, resulting in loss of efficiency, equipment damage, and possible fire.

Keep air filters cleaned. Clean or replace filter to maintain proper airflow and achieve maximum efficiency. Refer to page 11 for Maintenance & Inspection information.

FLOOD DAMAGE

⚠ WARNING:

Do not use this furnace if any part has been under water. A flood damaged furnace is extremely dangerous. Attempts to use the furnace can result in fire or explosion. A qualified service agency should be contacted to inspect the furnace and to replace all gas controls, control system parts, electrical parts that have been wet or the furnace if deemed necessary.

IMPORTANT SAFETY INFORMATION

VENTING SYSTEM

⚠ WARNING:

It is imperative to maintain proper operation of the venting system, including the masonry chimney (if applicable). Insufficient venting could create the production of excessive amounts of Carbon Monoxide (CO) - a colorless, odorless gas that is produced during incomplete combustion of any fuel. It can cause death without warning. Carbon monoxide poisoning can cause flu- like symptoms and also dizziness, fatigue, headaches, nausea, and irregular breathing.

If you suspect that you are experiencing CO poisoning, get fresh air immediately. Leave the home and call for assistance from a neighbor's home.

⚠ WARNING:

CARBON-MONOXIDE POISONING HAZARD

Failure to follow instructions could result in severe personal injury or death due to carbon-monoxide poisoning if combustion products infiltrate into the building.

Check that all openings in the outside wall around the vent (and air intake) pipe(s) are sealed to prevent infiltration of combustion products into the building.

Check that furnace vent (and air intake) terminal(s) are not obstructed in any way during all seasons.

NOTE: This applies to horizontally vented furnaces only.

- The U.S. Consumer Product Safety Commission (CPSC) recommends every home have a Carbon Monoxide detector in hallways near the bedrooms in each sleeping area. CO detectors should be certified to the most recent requirements of the UL, IAS OR CSA Standard and should be installed, operated, and maintained in accordance with the detector manufacturers instructions.

SOURCES OF CORROSION

It is known that certain common household chemicals can cause heat exchanger corrosion if the vapors are pulled into the furnace's burners The following is a list of chemicals that should not be used or stored near the furnace.

Do not store these chemicals near the furnace:
- Permanent wave solutions
- Chlorinated waxes and cleaners
- Chlorine based swimming pool chemicals
- Water softening chemicals
- De-icing salts or chemicals
- Carbon tetrachloride
- Halogen type refrigerants
- Cleaning solvents (perchloroethylene)
- Printing inks, paint removers, varnishes, etc.
- Hydrochloric acid
- Cements and glues
- Antistatic fabric softeners
- Masonry acid washing materials

⚠ CAUTION:

This furnace requires unrestricted airflow for combustion and ventilation. For proper and safe operation, it is extremely important that the furnace receives an unobstructed flow of clean, fresh air to properly burn the fuel gas. If this flow of air is restricted, the partially burned combustion gases may create dangerous amounts of carbon monoxide that can cause personal injury or death.

- Do not block or obstruct air openings on the furnace, air openings or spacings around the furnace area or the room or closet the furnace is in. Furniture and drapery should be arranged so that the supply air registers and return grilles are not obstructed.
- If your furnace obtains its air through a pipe to the outdoors, do not allow the inlet of the pipe to become blocked. If the furnace is operated without adequate air for combustion, the flame roll-out switch will open, turning off the gas supply to the burners. This indicates that a serious problem with the burners has occurred and must be corrected immediately. Only a licensed HVAC technician can reset this switch.
- Before remodeling near the furnace, consult with a local code official or the National Fuel Gas Code to make sure you will be in compliance with supplying adequate air for combustion. By erecting new walls, it is sometimes possible to inadvertently restrict the furnace's air supply. You can find more information about supplying combustion air in the NFGC, which is available at many libraries.

CLEARANCES TO COMBUSTIBLES

⚠ WARNING:

Do not place combustible materials on or against the furnace cabinet or within 6 inches of the vent pipe. Furnace area must be kept clear and free of combustible materials, gasoline and other flammable vapors and liquids. A fire or explosion may result causing property damage, personal injury or loss of life. Failure to follow the safety warnings exactly could result in serious injury, death or property damage.

The furnace is designed to have certain clearances to combustible items such as wood, paper, etc. Some types of insulation are combustible. If your furnace is installed in an attic, near unfinished walls, or in other insulated space, keep area surrounding the furnace free of insulating material.

ABOUT THE FURNACE

INTRODUCTION

Congratulations on the purchase on your new furnace! With our dedication to quality, superior reliability, and outstanding warranty, we know you will be pleased with this new appliance. This furnace has been designed and built to provide many years of safe and dependable home comfort, providing it is properly installed and regular maintenance has been performed. Improper use or insufficient maintenance can shorten the life of the furnace and result in serious personal injury or property damage. Please read this manual thoroughly and familiarize yourself with the safety, operation and maintenance procedures for this furnace. DO NOT DESTROY THIS MANUAL. KEEP IN A SAFE PLACE FOR FUTURE REFERENCE.

Your furnace is designed to fulfill the requirements of being classified as either a Category I or Category IV furnace. These classifications are related to the furnace's Annual Fuel Utilization Efficiency (AFUE) rating, the percentage of fuel that is converted into usable heating energy.

The furnace components shown on pages 6 & 7 will help to identify and locate various parts of the furnace. The component you need to familiarize yourself with is the gas valve. You will use this to turn the furnace on and off. **There are no user serviceable parts. All repairs must be performed by a licensed HVAC technician.**

Category I (Non-Condensing) Furnaces

These furnaces typically have an AFUE rating of about 80% and may be vented through a properly designed metal vent or masonry chimney. This venting system needs to be primarily vertical, so that the hot combustion products will develop a natural upwards draft action.

Category IV (Condensing) Furnaces

Category IV furnaces typically have an AFUE rating over 90% and are mainly vented through plastic PVC pipe. These furnaces also produce liquid condensate which is slightly acidic. The vent pipe must be sloped upwards away from the furnace to properly drain the condensate back to the condensate disposal system.

- Condensing type furnaces require condensate drain lines to be properly installed by the installer. Depending on your configuration, the drain lines may be routed out the left or right sides of the furnace. These drain lines must maintain a downward slope to ensure proper condensate drainage.
- Condensate must flow freely during furnace operation. The homeowner must make sure the condensate drain lines do not become blocked, pinched or crushed.
- If the furnace is installed in an area where temperatures fall below freezing, special precautions must be made for insulating condensate drain lines that drain to the outdoors. **If condensate freezes in the lines, this will cause the condensate drain switch to shut down the furnace. Only a licensed HVAC technician can reset this switch.**

FILTER

⚠ WARNING:

Never operate the furnace without a filter in place. Accumulating dust in the return air can build up on internal components, resulting in loss of efficiency, equipment damage, and possible fire.

- **Air filter(s) are not supplied with the furnace as shipped from the factory.** The installer must provide a high velocity filter and rack for a filter in the return air duct adjacent to the furnace, or in a return air grill to the furnace.
- The furnace should always have a clean filter located either at the air return on the furnace or in an air return register. If the filter becomes dirty, it should be cleaned or replaced.
- New or newly renovated homes may require more frequent changing until the construction dust has minimized. Filters designed to remove smaller particles such as pollen, may require additional maintenance.
- Always reinstall the doors on the furnace after servicing or cleaning/changing the filters. **Do not operate the furnace without all doors and covers in place.**

THERMOSTAT

This family of furnaces includes single stage, two-stage and modulating capabilities. These different capabilities require different thermostats to reach their best performance.

- Single stage furnaces should be controlled by a conventional single stage thermostat.
- Two-stage furnaces will perform best with a conventional two - stage thermostat. **NOTE:** It is possible to control two-stage furnaces with a single stage thermostat. Consult with your installer about which type is best for your installation. Both thermostats are commonly available at your local building supply store.

FURNACE LOCATION

If a furnace is installed in relatively small utility room or closet, the installation needs openings in the walls or door to let combustion air in. Make sure that these openings remain unobstructed. Do not modify these openings in any way without consulting a licensed HVAC technician.

COMPONENT LOCATIONS FOR SINGLE STAGE FURNACES

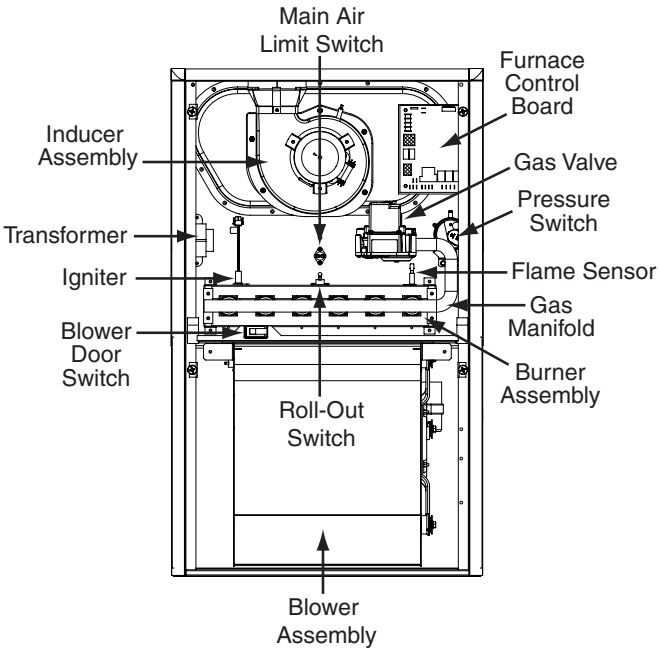

J801X*U Upflow / Horizontal
Non-Condensing Gas Furnace

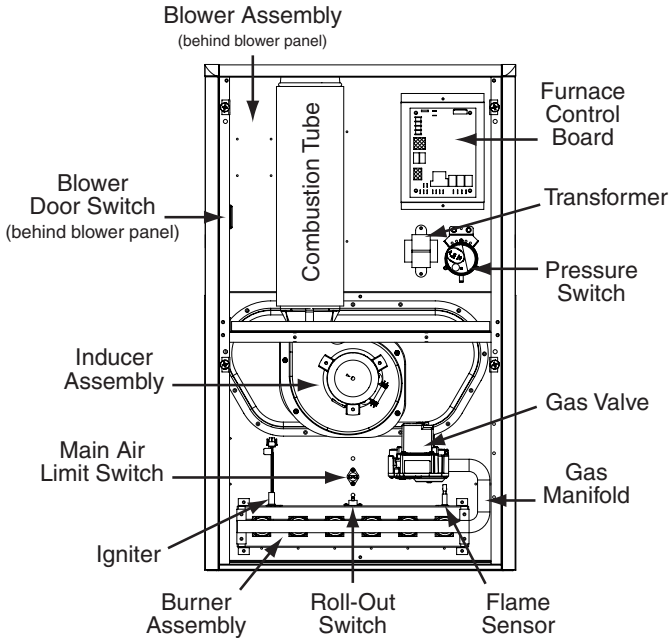

J801X*D Downflow
Non-Condensing Gas Furnace

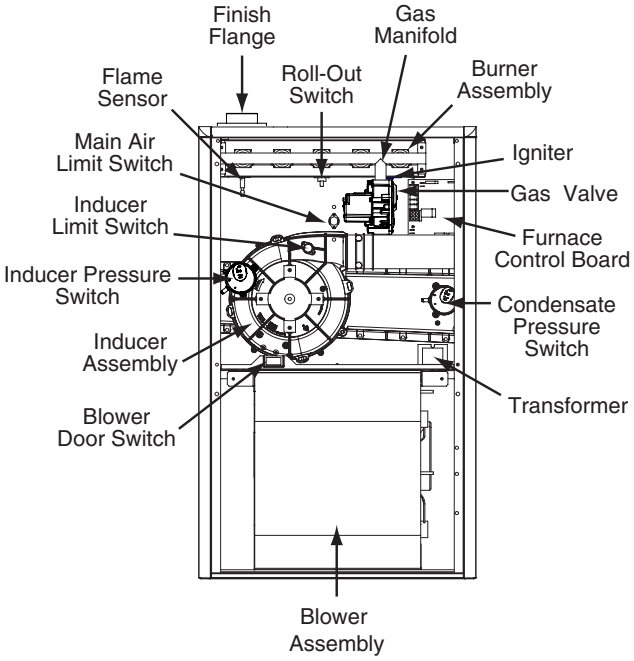

J951X*U Upflow / Horizontal
Condensing Gas Furnace

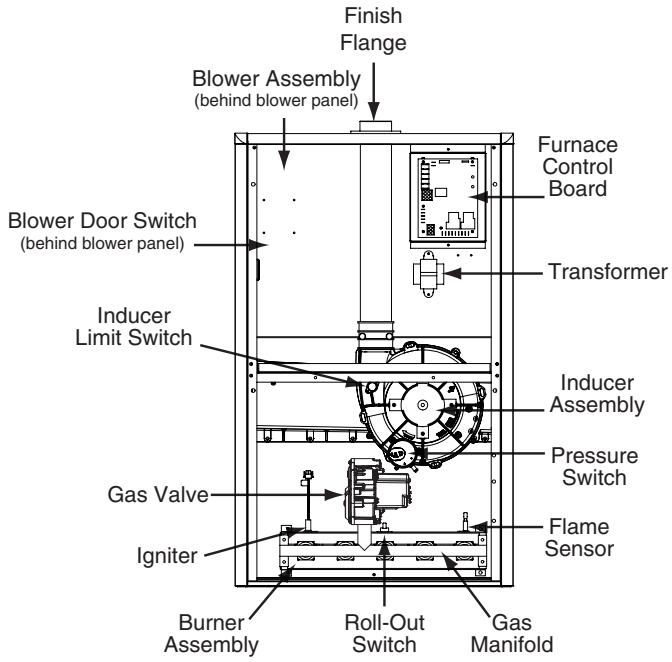

J951X*D Downflow
Condensing Gas Furnace

COMPONENT LOCATIONS FOR TWO-STAGE FURNACES

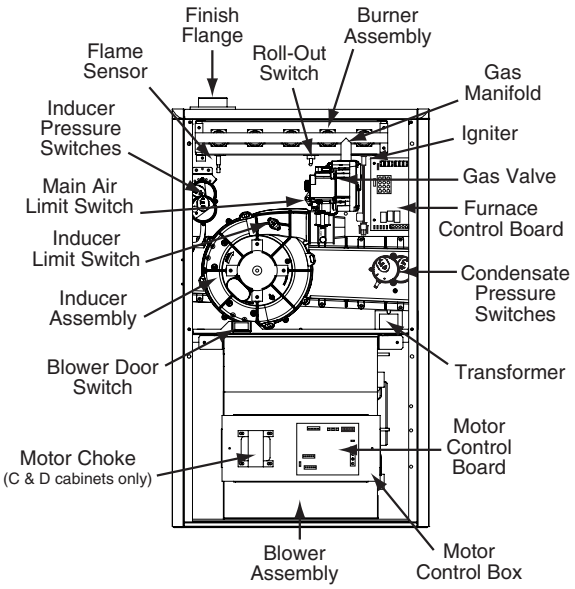

J952V*U Upflow / Horizontal Condensing Gas Furnace

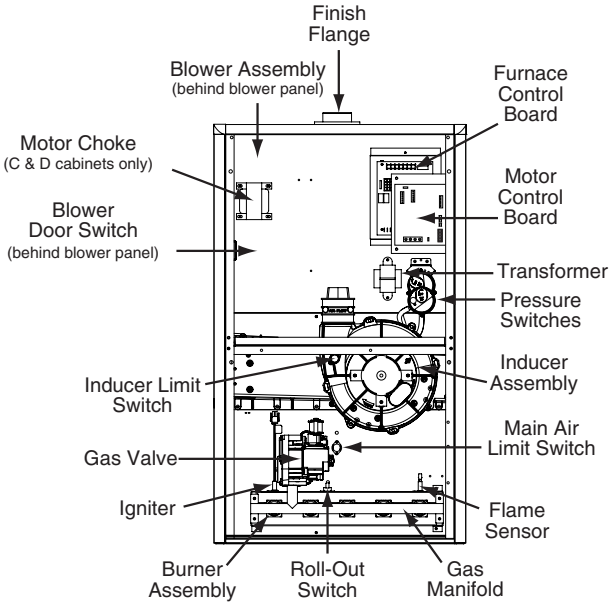

J962V*D Downflow Condensing Gas Furnace

STARTUP & SHUTDOWN

STARTING THE FURNACE

1. Make sure the filter is clean and in place.
2. Make sure the vent system is properly installed.
3. Set the thermostat to the lowest setting.
4. Close the manual gas valve outside the furnace.
5. Turn off all electric to the furnace.
6. Remove the door from the burner compartment.
7. Set the gas valve switch or knob to the OFF position. See Figure 1 for gas valve switch or knob location.
8. Wait 5 minutes. If there is any smell of gas, see “WHAT TO DO IF YOU SMELL GAS” on page 4.
9. Set the gas valve switch or knob to the ON position.
10. Turn on all electric to the furnace.
11. Open the manual gas valve.
12. Turn the thermostat back up to force ignition.
13. Observe operation, including burners. If burners fail to ignite, call a licensed HVAC technician.
14. Replace the door on the burner compartment.

SHUTTING DOWN THE FURNACE

IMPORTANT! IF YOU NEED TO SHUT DOWN YOUR FURNACE FOR SERVICE OR MAINTENANCE, SHUT OFF THE GAS VALVE TO THE FURNACE BEFORE TURNING OFF THE ELECTRICAL SERVICE.

NOTE: Your furnace may be equipped with one of three types of gas valves. Remove the door panel from the front of the furnace and determine which valve type matches your installation in Figure 1. Move the switch to the OFF Position.

If your installation has a manual gas shutoff valve on the gas supply pipe, shut this off, then shut off the electric to the furnace.

1. Set the thermostat to the lowest setting.
2. Close the manual gas valve outside the furnace.
3. Turn electric to the furnace off.
4. Open the door to the burner compartment.
5. Set the gas valve switch or knob to the OFF position.
6. Replace the door on the burner Compartment.

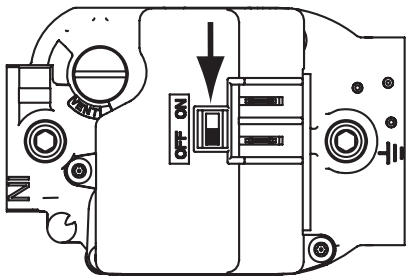

SINGLE STAGE VALVE

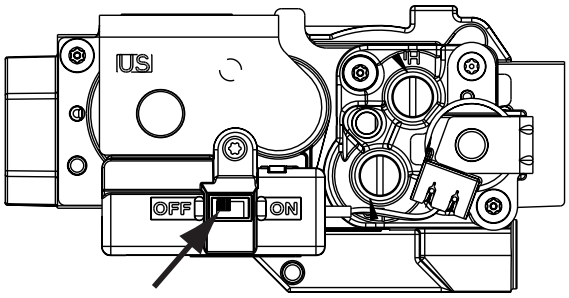

TWO - STAGE VALVE

Figure 1. Gas Valves

MAINTENANCE & INSPECTION

FURNACE & AIR DUCTS

- The furnace should be inspected annually by a licensed HVAC technician. Table 1 (page 9) contains suggested inspections and frequency of maintenance.
- Homeowners should perform frequent visual inspections of the furnace for obvious signs of deterioration. The furnace should be secure without sagging, cracks gaps, etc around the base. The return air duct connection(s) is secured and sealed to the furnace cabinet and terminates outside the area containing the furnace. Any signs of damage or loose connections should be repaired by a qualified HVAC technician.

VENTING SYSTEM

- For proper and safe operation, this furnace requires unrestricted airflow for combustion and ventilation. Inspect for blocked or obstructed air openings on or around the furnace (at the terminations outside the house), and the space around the furnace.
- The furnace venting system should be inspected annually by a licensed HVAC technician. Vent pipe must slope upwards and be physically secured without holes or corrosion. Any corroded section of vent pipe must be replaced, and any obstruction or blockage must be removed by the technician.
- Flue passageways, the vent system, and the burners should be inspected and cleaned (if required) by a licensed HVAC technician annually to ensure continued safe operation.
- Existing masonry chimneys should be inspected and relined (if necessary) by a licensed HVAC technician.

BLOWER & FILTER

- It is recommended that the blower compartment be cleaned of dirt or lint that may have accumulated in the compartment or on the blower and motor as part of the annual inspection.
- Keep air filters cleaned. It is recommended that the furnace air filter be checked at least once a month. Clean or replace filter to maintain proper airflow and achieve maximum efficiency.
- Furniture and drapery should be arranged so that the supply air registers and return grilles are not obstructed.

BURNER OPERATION

Perform the startup instructions on page 7. The igniter should ignite the closest burner and the flames should quickly carryover to the other burners. The flames should be bright blue, with occasional yellow streaks.

NEW CONSTRUCTION

Operating gas furnaces in construction environments can cause a variety of problems within the furnace and may significantly reduce the life or the performance of the furnace. Therefore operating the furnace during construction is not permitted and will void the warranty.

- Before occupancy, the furnace shall be inspected and approved by applicable local authority even if this results in redundant inspections.
- The duct work must be inspected and cleaned if found to contain any construction debris.
- The filter must be replaced or cleaned and the furnace must be inspected by a licensed HVAC technician. The furnace must be cleaned and/or repaired if found to be dirty, damaged, or malfunctioning in any way.

TROUBLESHOOTING

IF THE FURNACE FAILS TO OPERATE CHECK THE FOLLOWING:

1. Is the thermostat setting correct?
2. Are the blower compartment door(s) in place?
3. Has the circuit breaker tripped or the control board fuse burned open?
4. Is the gas turned on at the manual shutoff?
5. Is the filter dirty or clogged?

If the furnace still doesn't operate, contact a licensed HVAC technician

MAINTENANCE ITEMS	FREQUENCY OF MAINTENANCE		
	BEGINNING OF EACH HEATING SEASON	END OF EACH HEATING SEASON	MONTHLY
Verify furnace area is free of combustible materials.	X	X	X
Verify combustion and ventilation air is not restricted.	X	X	X
Verify no signs of physical deterioration of the furnace.	X	X	X
Verify no obstructions or restrictions in vent or chimney.	X	X	
Verify no holes or cracks in vent pipe.	X	X	
Verify no corrosion in vent pipe.	X	X	
Verify the horizontal vent pipes slope upwards away from furnace.	X	X	
Verify burner flame.	X		
Clean or replace filter(s).			X
Clean blower compartment.	X		
Clean burner assembly.	X		
Clean condensate collection & disposal system (if applicable).	X		

Table 1. Maintenance Table

AHRI CERTIFIED™
www.ahridirectory.org
Residential Furnaces
DOE 10 CFR Part 430

HRAI
YOUR ENVIRONMENT OUR EXPERTISE
MEMBER COMPANY

ENERGY STAR PARTNER

We Encourage Professionalism
NATE
Through Technician Certification by NATE

CERTIFIED

DESIGN CERTIFIED

10270340
(NEW)

(02/20)