INSTALLATION INSTRUCTIONS

Extreme Condition Curb Mounting Kit

JAYEXMK002A/003A For Mounting on Full Perimeter Curbs

USED WITH:
Oxbox 2 - 5 Ton Double
Deck Gas Units Only

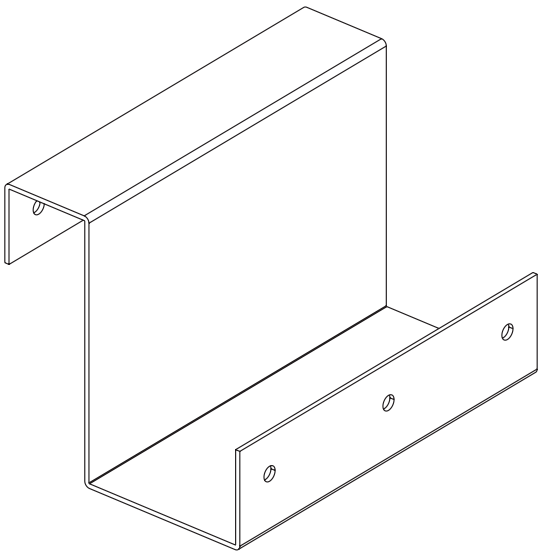

BX–SVN–JAYEXMK002–003–1A–EN

RECOGNIZE THIS SYMBOL AS AN INDICATION OF IMPORTANT SAFETY INFORMATION

WARNING

These instructions are intended as an aid to qualified licensed service personnel for proper installation, adjustment and operation of this unit. Read these instructions thoroughly before attempting installation or operation. Failure to follow these instruction may result in improper installation, adjustment, service or maintenance possibly resulting in fire, electrical shock, property damage, personal injury or death.

DO NOT DESTROY THIS MANUAL
Please read carefully and keep in a safe place for future reference by a serviceman.

Safety Section

⚠ WARNING

HAZARDOUS VOLTAGE!
Failure to follow this Warning could result in property damage, severe personal injury, or death.
Disconnect all electric power, including remote disconnects before servicing. Follow proper lockout/tagout procedures to ensure the power cannot be inadvertently energized.

⚠ CAUTION

SHARP EDGE HAZARD!
Failure to follow this Caution could result in personal injury.
Be careful of sharp edges on equipment or any cuts made on sheet metal while installing or servicing. Personal injury may result.

General Data

Kit Contents

Open and inspect kit contents for damage or missing items. Each kit contains:

Items	Quantity
Hold-Down Bracket	8
Self-drilling #12-3/4 Screws	48

Inspection

Check carefully for any shipping damage. This must be reported to and claims made against the transportation company immediately. Any missing parts should be reported to your supplier at once and replaced with authorized parts only.

Installation Instructions

These instructions are organized for an easy step-by step procedure.

1. Prior to setting the packaged unit onto the curb, attach the eight (8) brackets to the curb flange. There will be three (3) brackets on each of the long sides of the unit and one (1) bracket on each of the short sides of the unit. Each bracket will require three (3) of the #12 x 3/4” self-drilling screws supplied in the kit and attach to the curb flange as shown in Figure 1.

Figure 1. JAYEXMK002A/003A Installation
Unit Mounted To Full Perimeter Curb

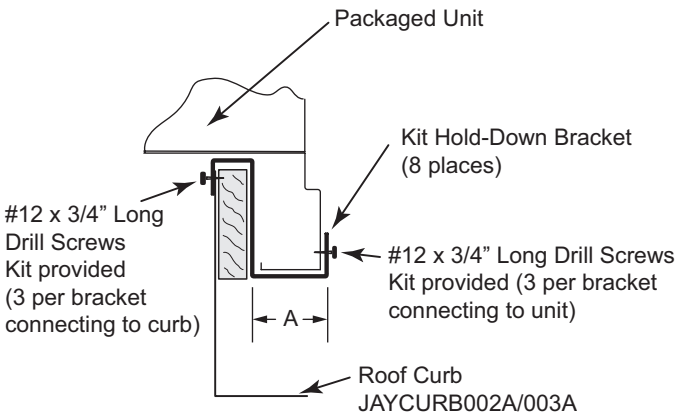

Models	A (in.)
******24 - 42	1.65
******48 - 60	1.49

2. Place the packaged unit on top of the curb. Using three (3) additional #12x3/4” self-drilling screws per bracket, attach the brackets to the unit base rail.

NOTE: *See Figure 2 for the location of brackets on ******24 - 42 models. Three (3) brackets on each of the long sides and one (1) bracket on each of the short sides.*

Figure 2. JAYEXMK002A Bracket Locations on ******24 – 42 Models

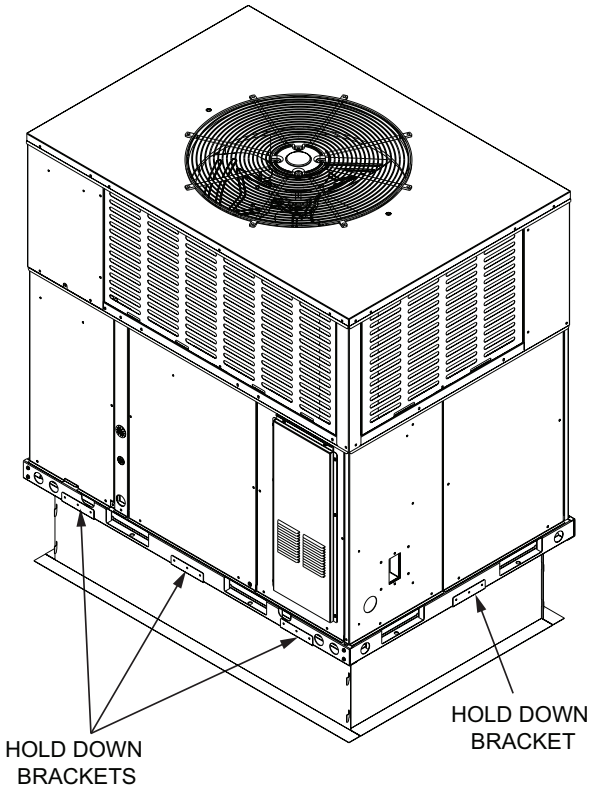

NOTE: *See Figure 3 for the location of brackets on ******48 - 60 models. Three (3) brackets on each of the long sides and one (1) bracket on each of the short sides.*

Figure 3. JAYEXMK003A Bracket Locations on ******48 – 60 Models

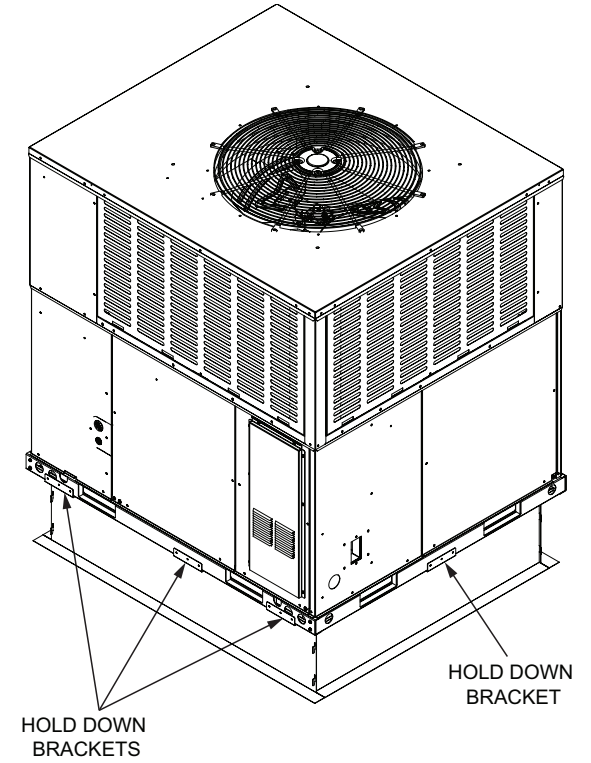

Oxbox®, endorsed by Trane®, offers simple, affordable residential heating and cooling solutions strong enough to tackle the toughest conditions. For more information visit www.oxboxhvac.com.

Intertek

The manufacturer has a policy of continuous data improvement and it reserves the right to change design and specifications without notice. We are committed to using environmentally conscious print practices.

Representative-only illustrations included in this document.

BX-SVN-JAYEXMK002-003-1A-EN 28 Jul 2021
Supersedes (New)

© 2021